WLC90 Heavy Duty LED Light - PWM Dimmable

Datasheet

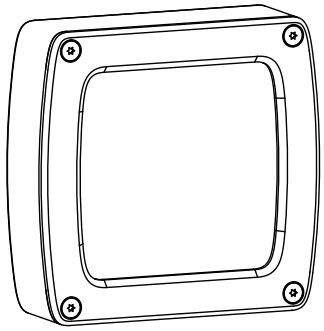

Banner's WLC90 Heavy Duty Lights are designed to operate in harsh environments and withstand washdown and spray from water as well as many chemicals including coolants and detergents. They are compact and bright, making them an excellent choice for machining centers and food processing equipment.

- Intensity can be controlled from 0 to 100% using Pulse Width Modulation (PWM) on an input control wire
- Oil, chemical, and water resistant with IP67, IP68g, and IP69K ratings
- Wide operating temperature range with an internal monitoring circuit that dims the LEDs to a safe level at extreme temperatures
- Three lens choices to suit many application needs
- Pan-and-tilt brackets for versatile mounting to direct the light in any direction
- Models have three discrete intensity level settings

Use with the LC65 Dimmer Module. For more information, refer to the LC65 LED Dimmer Module datasheet, p/n 177086.

Models [1]	Lens Angle	Connection	Window
WLC90WL8PWMQ	± 8 degrees	Integral 4-Pin Euro QD Side Exit	Polycarbonate
WLC90WL15PWMQ	± 15 degrees		
WLC90WL30PWMQ	± 30 degrees		
WLC90WL8RPWMQ	± 8 degrees	Integral 4-Pin Euro QD Rear Exit	
WLC90WL15RPWMQ	± 15 degrees		
WLC90WL30RPWMQ	± 30 degrees		
WLC90WGL8PWMQ	± 8 degrees	Integral 4-Pin Euro QD Side Exit	Borosilicate Glass
WLC90WGL15PWMQ	± 15 degrees		
WLC90WGL30PWMQ	± 30 degrees		
WLC90WGL8RPWMQ	± 8 degrees	Integral 4-Pin Euro QD Rear Exit	
WLC90WGL15RPWMQ	± 15 degrees		
WLC90WGL30RPWMQ	± 30 degrees		

The following caution applies only to the "± 8 degrees" models:

CAUTION:

Risk Group 2: Possibly hazardous optical radiation emitted from this product.

Do not stare at the operating lamp. May be harmful to the eyes. Risk Group 2 (RG 2) products generally do not pose a realistic optical hazard if aversion responses limit the exposure duration or where lengthy exposures are unrealistic.

- IEC 62471

[1] The listed models have 4-pin integral QDs. To order the 2 m (6.5 ft) cable models, omit the suffix "Q" from the model number. For example, WLC90WL8PWM. Models with a QD connector require a mating cable.

Original Document
179495 Rev. A

1 July 2014

179495

Specifications

Supply Voltage
Operating Voltage: 12 to 30 V dc

Pulse Width Modulation (PWM) Input
Frequency: Up to 1000 Hz
Voltage: 8 to 30 V dc
Current: 2 mA max.

Max. Current
850 mA at 12 V dc
410 mA at 24 V dc
330 mA at 30 V dc
Max. input power: 10.2 Watts

Typical Current
720 mA at 12 V dc
336 mA at 24 V dc
269 mA at 30 V dc

Supply Protection Circuitry
Protected against reverse polarity and transient voltages

Construction
Nickel plated aluminum housing, polycarbonate or borosilicate glass window

Connections
Integral 4-pin M12/Euro-style QD (4-pin connecting cordset required for QD models)

Certifications

Operating Temperature
−40 °C to +70 °C (−40 °F to +158 °F)
Light output begins to decrease above 50 °C (122 °F) and will be approximately 33% lower at 70 °C (158 °F)

Light Characteristics
Color Temperature (CCT): 6000–7100 K
Color: Cool White
Lumen Output at 25 °C (77 °F) typical: 700
Luminous efficacy at 25 °C (77 °F) typical: 87 lumens per watt at 24V dc

Spacing Criterion
8 degree: 0.28
15 degree: 0.52
30 degree: 0.90

Environmental Rating
IEC IP67/IP68g / IP69K per DIN 40050

Storage Temperature
−40 °C to +70 °C (−40 °F to +158 °F)

Vibration and Mechanical Shock
All models meet Mil. Std. 202F requirements method 201A (vibration: 10 to 60 Hz max., double amplitude 0.06", maximum acceleration 10G). Also meets IEC 947-5-2; 30G 11 ms duration, half sine wave.

Spacing Criteria (SC)

The spacing criteria is the fixture-spacing-to-mounting-height ratio and aids in laying out a pattern of fixtures. Multiply the spacing criteria by the mounting height to get the maximum fixture spacing that still provides even illumination (no shadowing between fixtures).

Luminaire Spacing = SC × Height to Illuminated Plane

The mounting height is the distance from the fixture to the surface you are lighting.

Light Characteristics

Max Lux at 1 M (L8 Lens)

Polar Candela Distribution

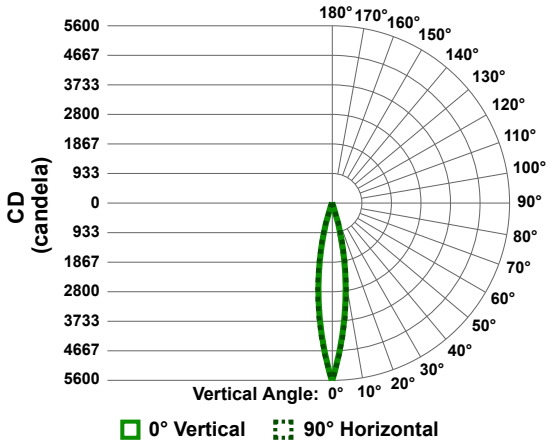

Isolux Pattern

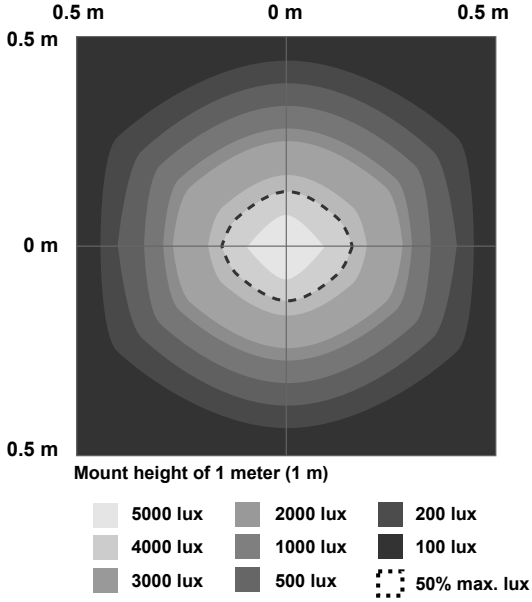

Illuminance at a Distance

	Center Beam (lux)	Beam Width (m) Vert.	Beam Width (m) Horiz.
0.2 m	201,132 lux	0.0 m	0.0 m
0.3 m	50,283 lux	0.1 m	0.1 m
0.5 m	22,348 lux	0.1 m	0.1 m
0.7 m	12,571 lux	0.2 m	0.2 m
0.8 m	8,045 lux	0.2 m	0.2 m
1.0 m	5,587 lux	0.3 m	0.3 m

Vertical Spread: 14.9°

Horizontal Spread: 16.4°

Horizontal = Connection on the bottom.

Max Lux at 1 M (L15 Lens)

Polar Candela Distribution

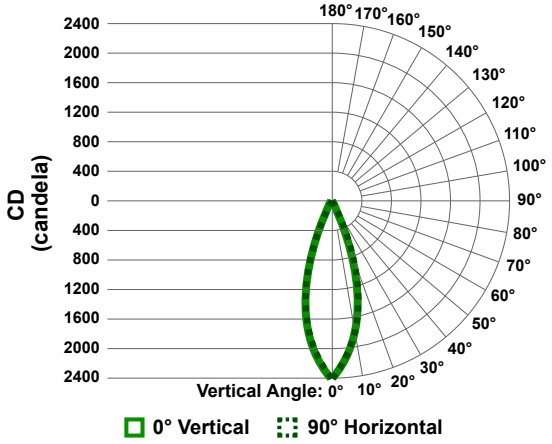

Isolux Pattern

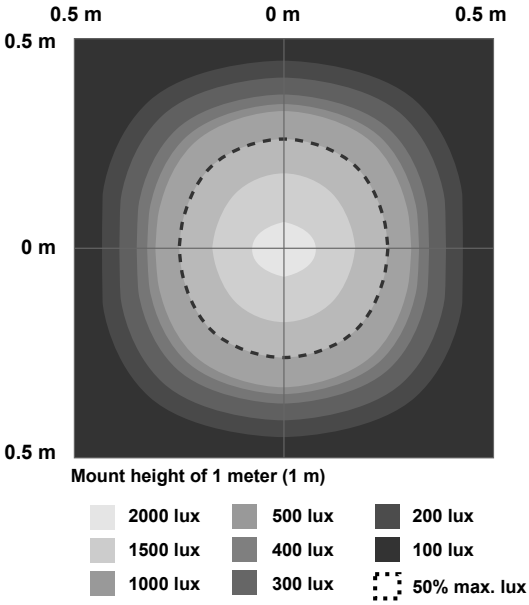

Illuminance at a Distance

	Center Beam (lux)	Beam Width (m) Vert.	Beam Width (m) Horiz.
0.2 m	83,952 lux	0.1 m	0.1 m
0.3 m	20,988 lux	0.2 m	0.2 m
0.5 m	9,328 lux	0.3 m	0.3 m
0.7 m	5,247 lux	0.4 m	0.4 m
0.8 m	3,358 lux	0.5 m	0.5 m
1.0 m	2,332 lux	0.5 m	0.5 m

Vertical Spread: 30.6°

Horizontal Spread: 30.6°

Horizontal = Connection on the bottom.

Max Lux at 1 M (L30 Lens)

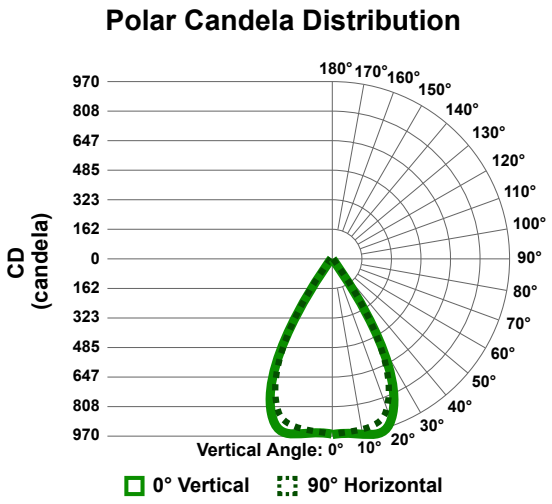

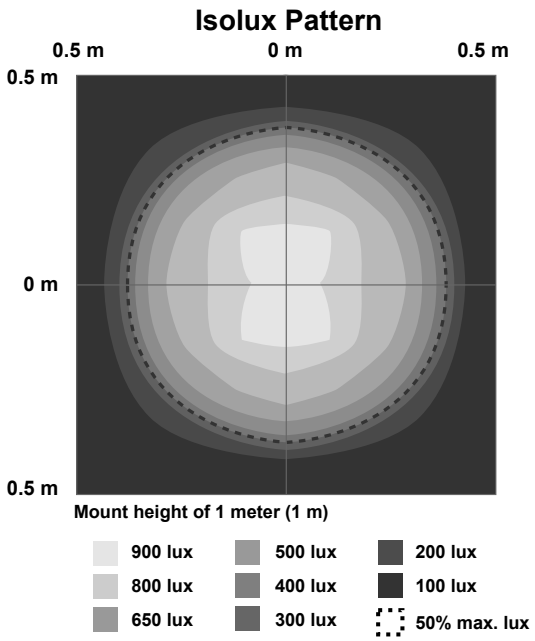

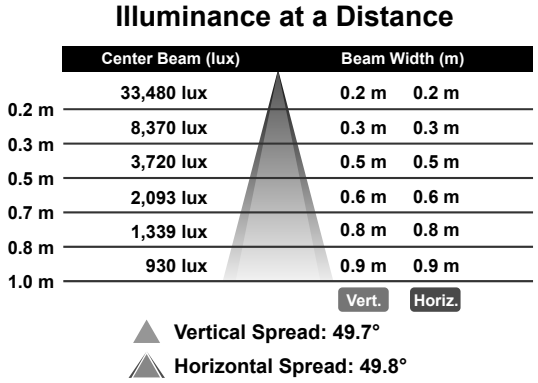

Horizontal = Connection on the bottom.

Dimensions

WLC90 Side Exit Models

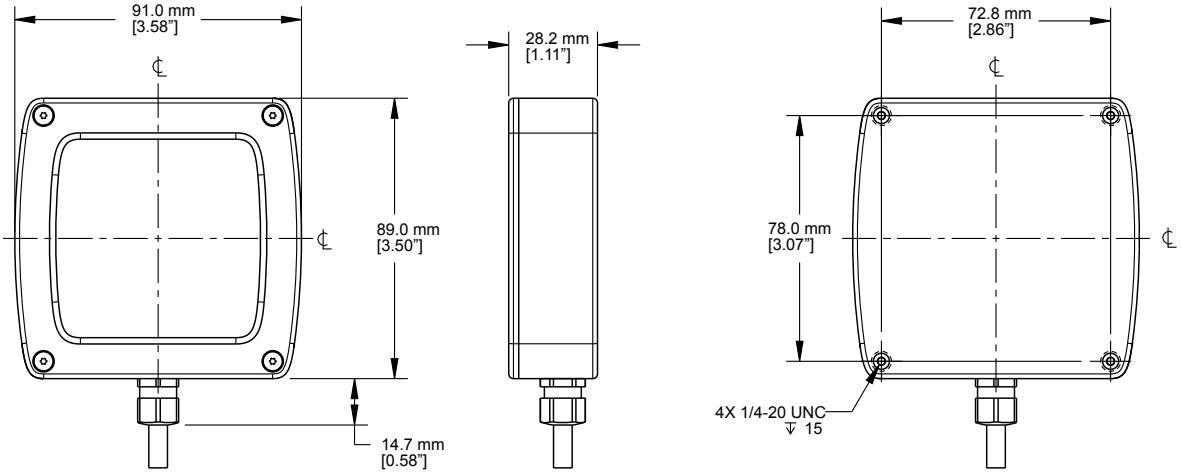

WLC90 Rear Exit Models (WLC90...RQ)

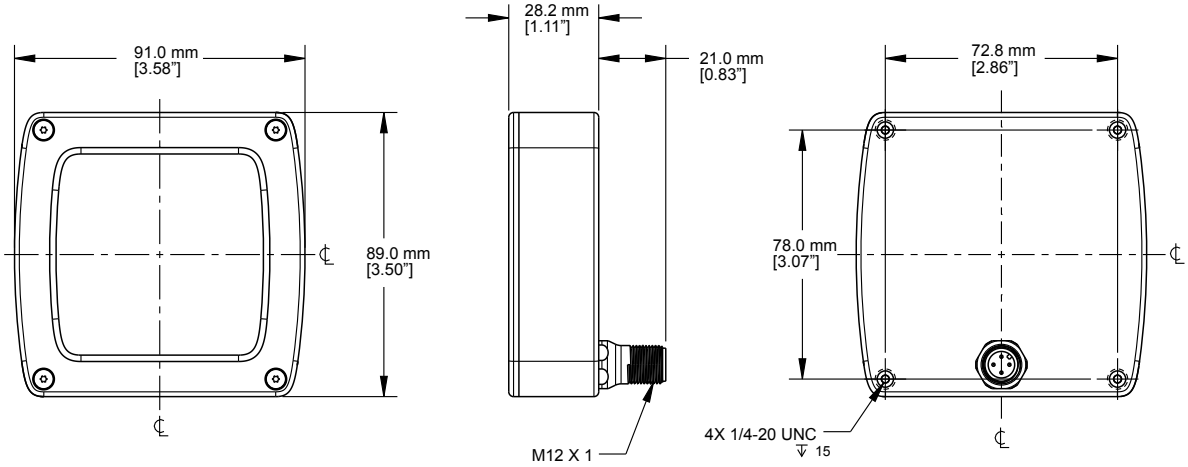

Wiring

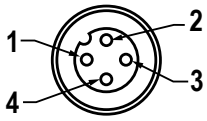

Pins	Color	Connection
1	brown	12 to 30 V dc
3	blue	dc common
4	black	Pulse width modulation (PWM) input
2	white	Not used

For maximum intensity, leave the white and black wires floating or connected to common.

Accessories

Brackets

LMBWLC90PT

- Pan and tilt bracket
- 300 series stainless steel
- Hardware for connecting to light included

SMBAMS70AS

- 316 stainless steel right-angle bracket
- Articulated slots for 90+ degrees rotation
- Four ¼-20 stainless steel screws included

SMBFLXMAGR

- Protective magnet cover prevents scratches to painted surfaces

SMBMAG3

- 3.2 inch diameter magnet with 95 lbs pull force
- Use with LMBWLC90PT or SMBAMS70AS bracket
- Hardware for mounting to bracket included

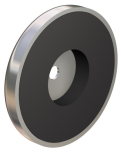

Cordsets

4-Pin Threaded M12/Euro-Style Cordsets				
Model	Length	Style	Dimensions	Pinout
MQDC-406	1.83 m (6 ft)	Straight	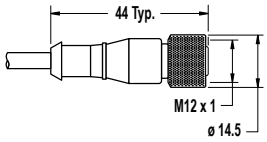	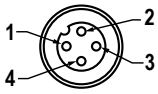 1 = Brown 2 = White 3 = Blue 4 = Black
MQDC-415	4.57 m (15 ft)			
MQDC-430	9.14 m (30 ft)			
MQDC-450	15.2 m (50 ft)			
MQDC-406RA	1.83 m (6 ft)	Right-Angle	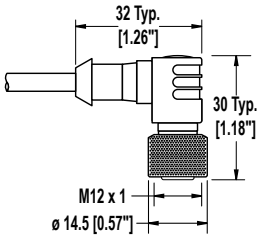	
MQDC-415RA	4.57 m (15 ft)			
MQDC-430RA	9.14 m (30 ft)			
MQDC-450RA	15.2 m (50 ft)			

4-Pin Threaded M12/Euro-Style Cordsets—Washdown, Stainless Steel				
Model	Length	Style	Dimensions	Pinout
MQDC-WDSS-0406	1.83 m (6 ft)	Straight	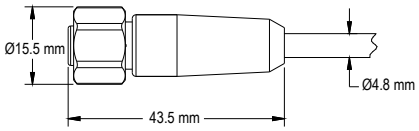	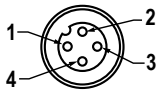 1 = Brown 2 = White 3 = Blue 4 = Black
MQDC-WDSS-0415	4.57 m (15 ft)			
MQDC-WDSS-0430	9.14 m (30 ft)			

Banner Engineering Corp Limited Warranty

Banner Engineering Corp. warrants its products to be free from defects in material and workmanship for one year following the date of shipment. Banner Engineering Corp. will repair or replace, free of charge, any product of its manufacture which, at the time it is returned to the factory, is found to have been defective during the warranty period. This warranty does not cover damage or liability for misuse, abuse, or the improper application or installation of the Banner product.

THIS LIMITED WARRANTY IS EXCLUSIVE AND IN LIEU OF ALL OTHER WARRANTIES WHETHER EXPRESS OR IMPLIED (INCLUDING, WITHOUT LIMITATION, ANY WARRANTY OF MERCHANTABILITY OR FITNESS FOR A PARTICULAR PURPOSE), AND WHETHER ARISING UNDER COURSE OF PERFORMANCE, COURSE OF DEALING OR TRADE USAGE.

This Warranty is exclusive and limited to repair or, at the discretion of Banner Engineering Corp., replacement. IN NO EVENT SHALL BANNER ENGINEERING CORP. BE LIABLE TO BUYER OR ANY OTHER PERSON OR ENTITY FOR ANY EXTRA COSTS, EXPENSES, LOSSES, LOSS OF PROFITS, OR ANY INCIDENTAL, CONSEQUENTIAL OR SPECIAL DAMAGES RESULTING FROM ANY PRODUCT DEFECT OR FROM THE USE OR INABILITY TO USE THE PRODUCT, WHETHER ARISING IN CONTRACT OR WARRANTY, STATUTE, TORT, STRICT LIABILITY, NEGLIGENCE, OR OTHERWISE.

Banner Engineering Corp. reserves the right to change, modify or improve the design of the product without assuming any obligations or liabilities relating to any product previously manufactured by Banner Engineering Corp.